PART NO.	DIM "A"	DIM "B"	DESCRIPTION
266824-001	47.75	50.00	2X4 SHEET ROCK ADAPTER, PAINTED STEEL POWDER COAT WHITE
266824-002	41.75	44.00	2X3.5 SHEET ROCK ADAPTER, PAINTED STEEL POWDER COAT WHITE
266824-003	35.75	38.00	2X3 SHEET ROCK ADAPTER, PAINTED STEEL POWDER COAT WHITE
266824-004	23.75	26.00	2X2 SHEET ROCK ADAPTER, PAINTED STEEL POWDER COAT WHITE
64141-001S	47.75	50.00	2X4 SHEET ROCK ADAPTER, T-304 SST - 3B FINISH
64141-002S	41.75	44.00	2X3.5 SHEET ROCK ADAPTER, T-304 SST - 3B FINISH
64141-003S	35.75	38.00	2X3 SHEET ROCK ADAPTER, T-304 SST - 3B FINISH
64141-004S	23.75	26.00	2X2 SHEET ROCK ADAPTER, T-304 SST - 3B FINISH

REV.	DESCRIPTION	BY	DATE
~	PRODUCTION RELEASE;ECN-51787A	AMO	11/26/2012
A	UPDATED PICTORIAL; UPDATED SST PART NUMBERS; ECN-51975A	AMO	4/19/13
B	DESCRIPTION; PAINTED STEEL POWDER COAT WHITE WAS POWDER COAT WHITE; ECN-52070.	RCH	7/2/13

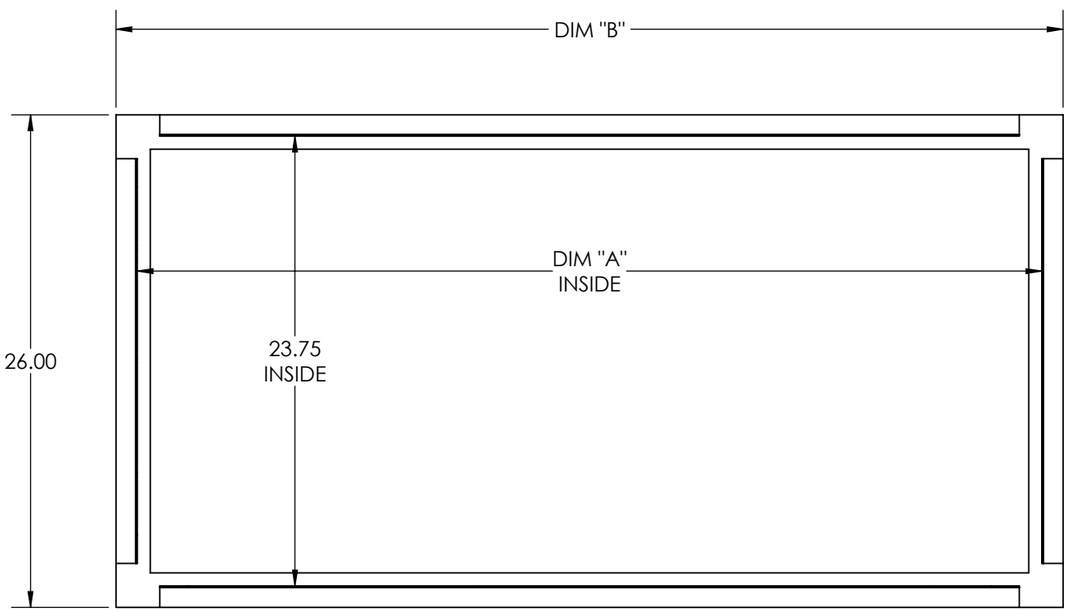

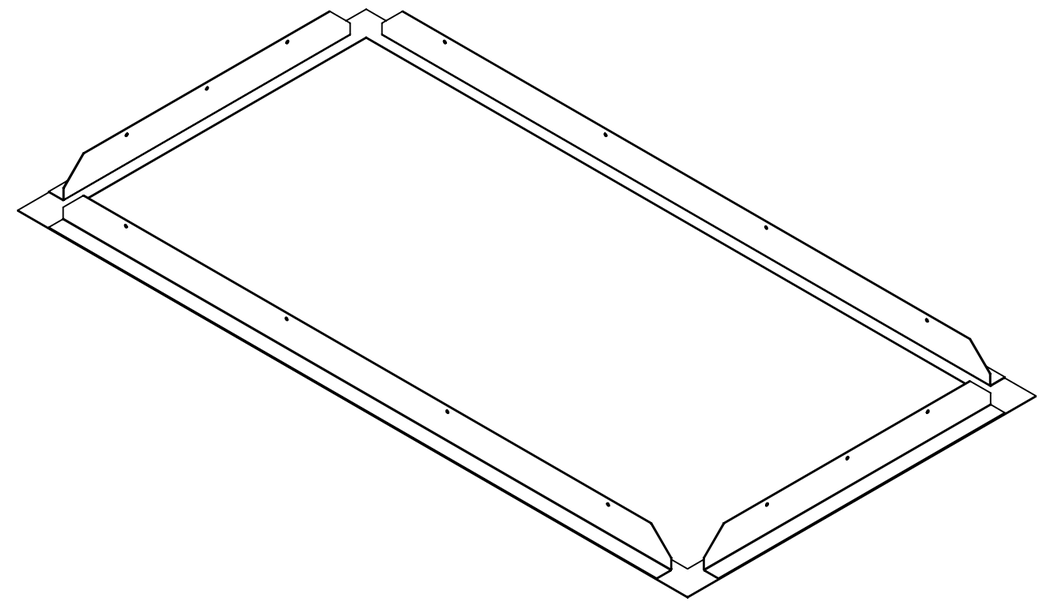

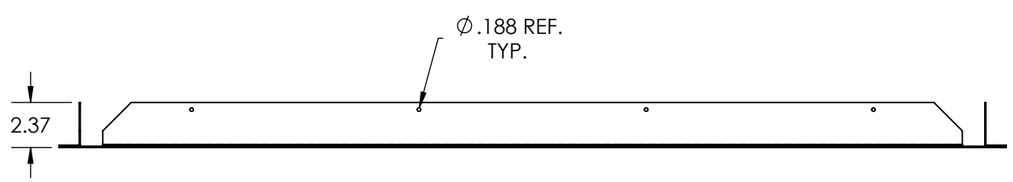

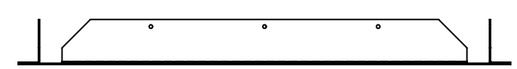

DIMENSIONS ARE IN INCHES	MATERIAL:			ENVIRCO Innovators in clean air technology			TITLE SHEET ROCK ADAPTER MAC10's	REV B
TOLERANCES-UNLESS OTHERWISE SPECIFIED								SCALE 1:8
.X OR X/X ±.05 CONC .005 TIR .XX ±.03 BEND RAD: DWG 122223 .XXX ±.015 FINISH: NONE ANGULAR ±1° REMOVE BURRS AND SHARPS	SHEAR SIZE	SQ FT	U/M	DRN AMO	CKD DAR	APP DAR	DWG 8000010	SHEET 1/1
	x		EA	11/26/2012	11/26/2012	11/26/2012		